RMW Series Pump – Annual Pump Maintenance Recommendation

In most areas of the country, municipal water supplies contain high amounts of dissolved minerals or scale. It is important that these pump maintenance recommendations are followed to help prevent premature issues with your new RMW Series pump.

NOTE: Often times, a pump may fail to function properly or overheat due to high amounts of water deposits inside the pump. In these cases, warranty repair does not apply. Please follow these recommendations which are made solely by APW Distributing Inc. (not AR North America) and are based on our feedback from numerous past customer interactions regarding this pump series.

Maintenance Steps:
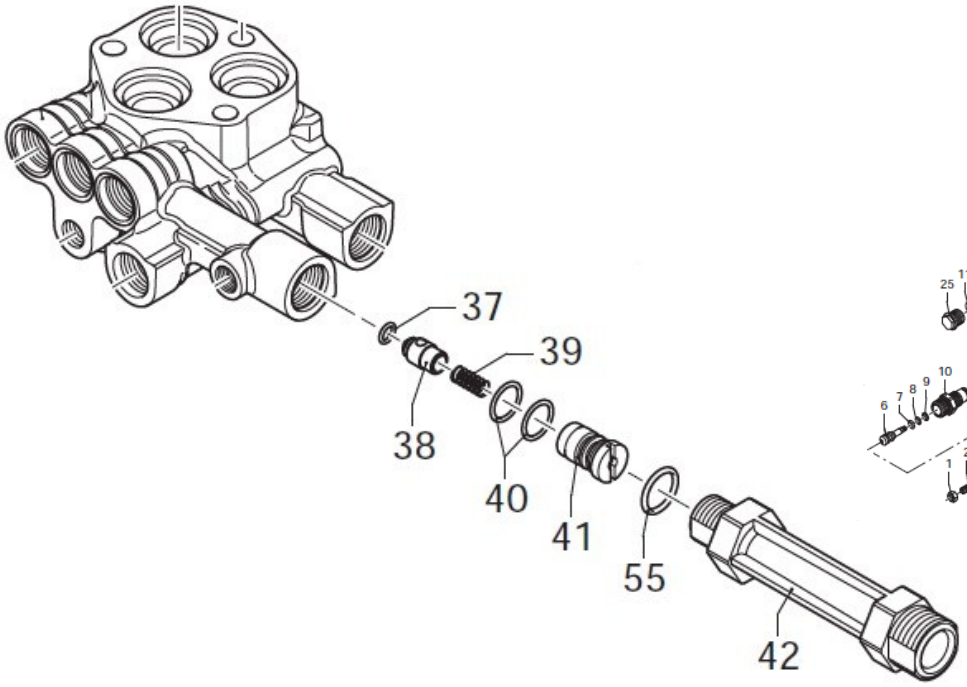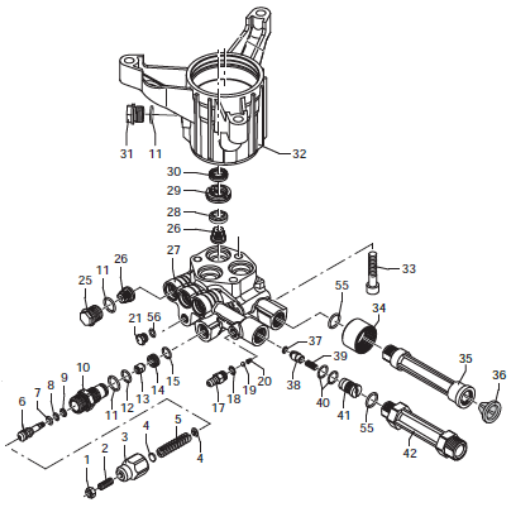
1. Remove **Outlet Tube** (part# 42) with a crescent wrench
2. Unscrew the **Detergent Injector** (part# 41) with a flat head screwdriver. This method should nearly remove the detergent injector. You will also need a small sheet rock screw (2 ½") to complete removal. Insert the small sheet rock screw into the center of the detergent injector, and once connected snuggly, pull out the sheet rock screw, taking the actual detergent injector along with it.
3. Next, remove the **Jet Kit** (parts # 37, 38, & 39) by hooking up an air hose or garden hose to the inlet of the pump. Once either the air hose or garden hose are connected, turn on for a short burst which will force out the jet kit portion of the pump. Note that you will want to have your hand in front of the outlet before turning on the hose so that you may catch the jet kit while it is forced out by the air or water.
4. Now use a descaling chemical such as Lime A Way®, CLR®, or white vinegar to clean the removed pump parts until the mineral deposits have been removed.
5. Also use the supplied pipe cleaning brush along with your chemical cleaner choice to clean the inside of the pump outlet (the location where parts# 37, 38 & 39 came out of the pump outlet.)
6. Once cleaning is completed, rinse the parts thoroughly with clean water, and re-install back into the pump.